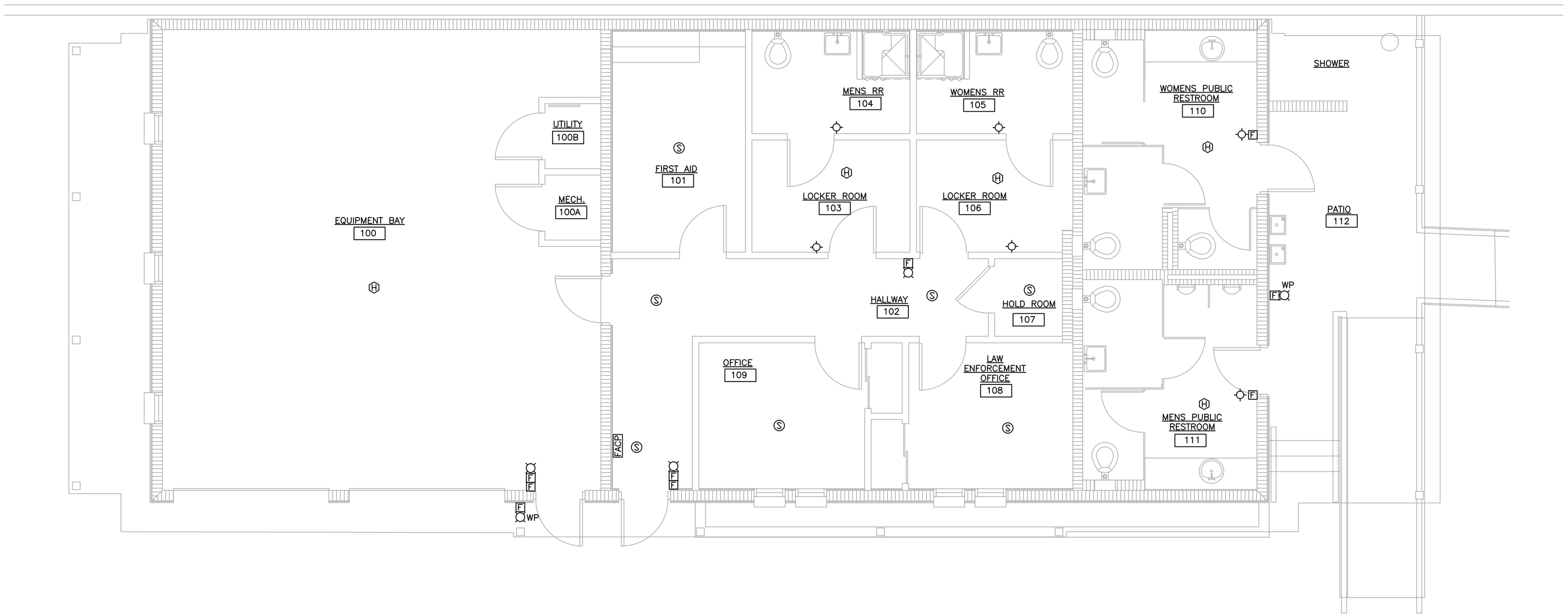

N

FIRE ALARM PLAN
1/4" = 1'-0"

GENERAL NOTES:

1. DEVICE LOCATIONS ARE DIAGRAMMATIC. FIELD VERIFY FINAL PLACEMENT.
2. INSTALLATION AND TESTING SHALL BE IN STRICT CONFORMANCE WITH THE NEC ARTICLE 760, NFPA 72, LOCAL CODES AND AHJ.
3. ALL EQUIPMENT SHALL BE UL LISTED.
4. ALL DEVICES SHALL BE COMPATIBLE WITH FACP.
5. ALL FIRE ALARM COMPONENTS AND DEVICES SHALL BE RATED FOR TEMPERATURE AND HUMIDITY IN THE ENVIRONMENT IN WHICH IT IS LOCATED.

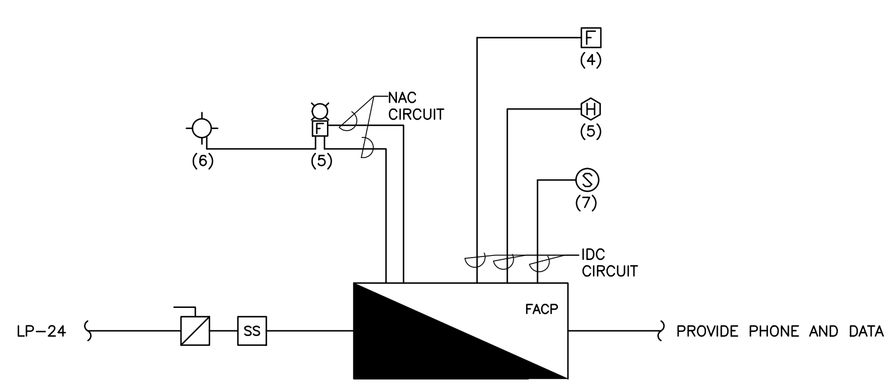

FIRE ALARM SYSTEM RISER DIAGRAM
N.T.S.

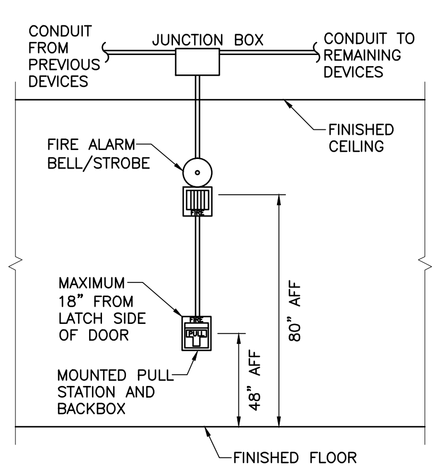

FIRE ALARM INITIATION AND NOTIFICATION MOUTING DETAIL
N.T.S.

GRAPHIC SCALE
12" 0 1' 4' 7' 11'
1/4"=1'-0"

STEVEN V. SVEDA
FL PE# 68982

DESIGN, INC.
913 NORTH NOVA RD.
HOLLY HILL, FL 32117
AA 26000567
PHONE (386) 255-6987
FAX (386) 255-6989

CDE COMPANY
Cape Design Engineering Co.
191 Center St. - Suite 201
Cape Canaveral, FL 32920
Phone: (321) 799-2970
BUSINESS LICENSE # EB8072

REV	REVISIONS	DATE

COUNTY OF VOLUSIA
CARDINAL AVENUE LIFEGUARD STATION
FIRE ALARM SYSTEM PLAN

CARDINAL AVENUE
ORMOND BEACH, FLORIDA

PJT#:	10-J-051
DATE:	09-20-11
DRN BY:	B. KHOURY
DGN BY:	B. KHOURY
REV BY:	S. SVEDA
SCALE:	

SHEET
E4.1