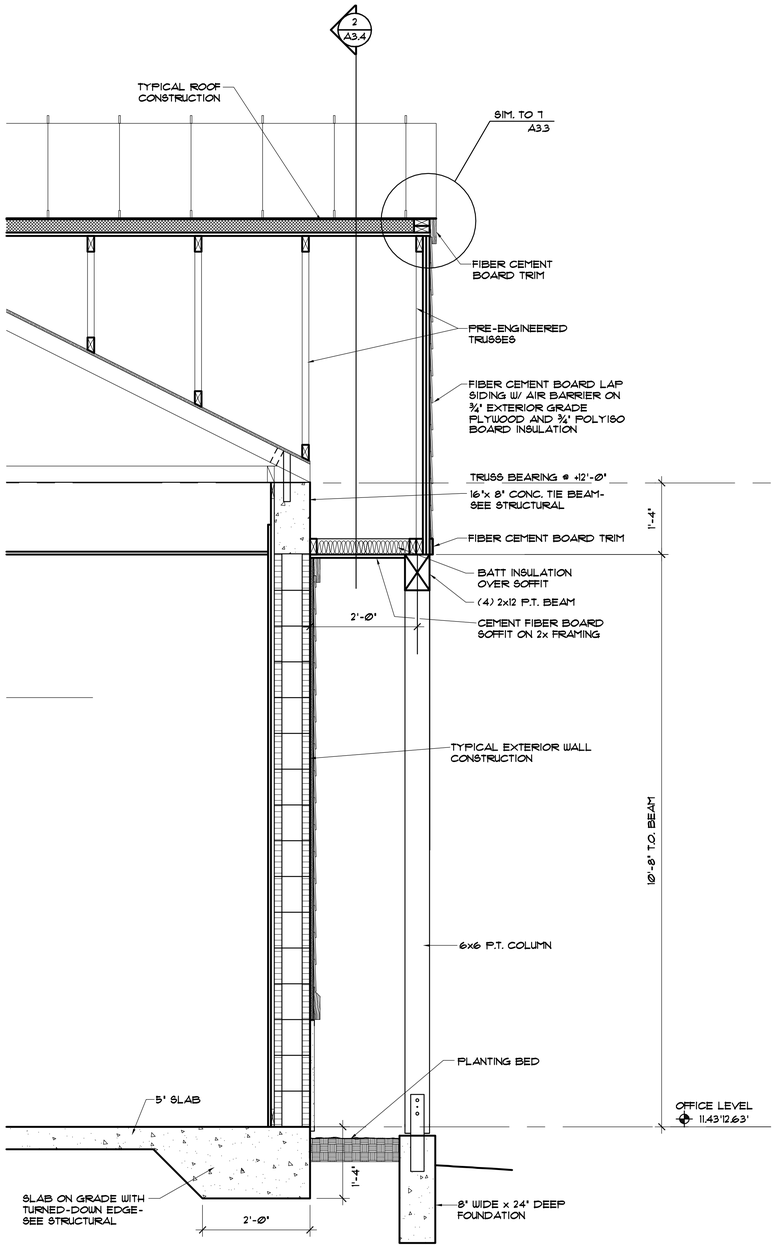

SECTION 1/A3.4
SCALE: 3/4"=1'-0"

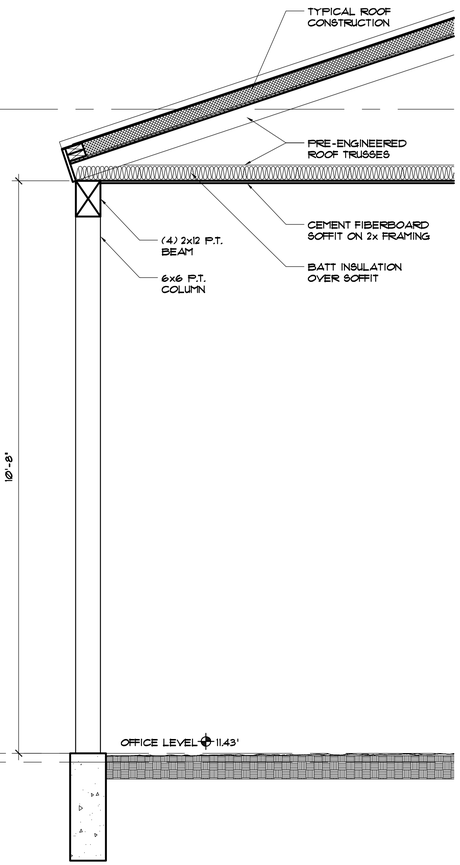

SECTION 2/A3.4
SCALE: 3/4"=1'-0"

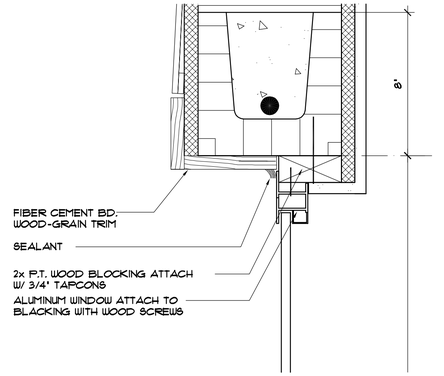

HEAD DETAIL 4/A3.4
SCALE: 3"=1'-0"

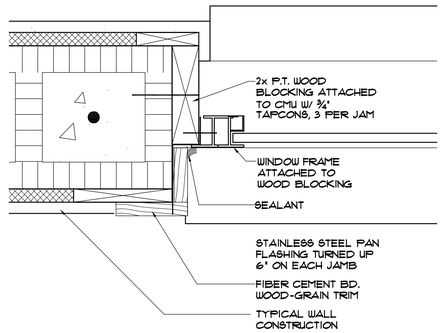

JAMB DETAIL 5/A3.4
SCALE: 3"=1'-0"

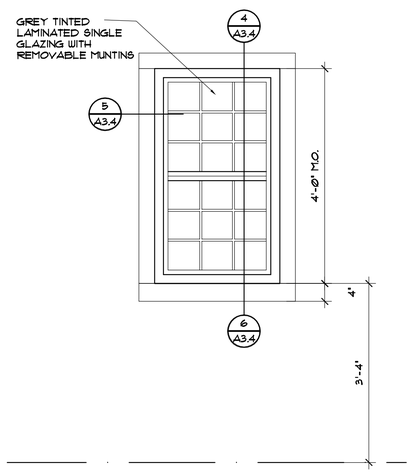

WINDOW ELEVATION 3/A3.4
SCALE: 3/4"=1'-0"
WINDOW TYPE 1

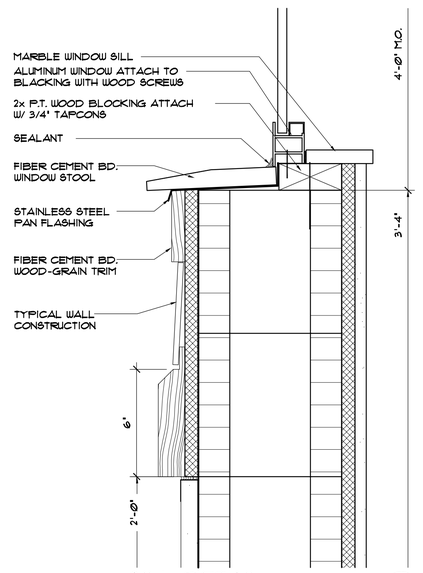

SILL DETAIL 6/A3.4
SCALE: 3"=1'-0"

DESIGN, INC.
913 NORTH NOVA RD.
HOLLY HILL, FL 32117
AA 26000567
PHONE (386) 255-6987
FAX (386) 255-6989

REV#	REVISIONS	DATE
1		
2		
3		
4		
5		
6		
7		
8		

COUNTY OF VOLUSIA
CARDINAL AVENUE LIFEGUARD STATION

CARDINAL AVENUE
ORMOND BEACH, FLORIDA

PJT#: 02209.05
DATE: 9-2-11
DRN BY: JMW
DGN BY: JMW
REV BY: -
SCALE: -

SHEET

A3.4