GENERAL NOTES:

1. ALL WORK INDICATED SHALL BE COMPLETED IN ACCORDANCE WITH THE APPLICABLE CODES.
2. MATERIALS SHALL BE LISTED BY THE UNDERWRITER'S LABORATORIES, INC. OR ANOTHER APPROVED/CERTIFIED TESTING LABORATORY. SHOULD PLANS AND CODES CONFLICT, CONTACT THE FACILITIES PROJECT MANAGER. MAKE NO CHANGES, EVEN IN CASE OF CONFLICT, WITHOUT FIRST OBTAINING THE APPROVAL OF THE PROJECT MANAGER.
3. DESIGN DRAWINGS ARE DIAGRAMMATIC AND DO NOT SHOW ALL OFFSETS, BENDS, ELBOWS, OR OTHER SPECIFIC ELEMENTS THAT MAY BE REQUIRED FOR PROPER INSTALLATION OF THE WORK. SUCH WORK SHALL BE VERIFIED AT THE SITE. ADDITIONAL BENDS, OFFSETS AND CONDUIT AS REQUIRED BY VERTICAL AND HORIZONTAL EQUIPMENT LOCATIONS OR OTHER JOB CONDITIONS, SHALL BE PROVIDED TO COMPLETE THE WORK AT NO ADDITIONAL COST TO THE OWNER.
4. EQUIPMENT SHOWN ON THE DEMOLITION PLAN SHALL BE REMOVED UNLESS OTHERWISE INDICATED. REMOVE ASSOCIATED CONDUIT AND WIRE (NOT SHOWN) UNLESS INDICATED FOR REUSE ON THE NEW WORK PLAN. WHERE EQUIPMENT IS TO BE REMOVED, THE ASSOCIATED CONDUIT AND WIRE SHALL BE RELOCATED AS REQUIRED TO FACILITATE MODIFICATIONS. PRIOR TO DEMOLITION, VERIFY VIA CIRCUIT TRACING, ALL CIRCUITS TO REMAIN. TAG CIRCUITS ACCORDINGLY.
5. WIRING FOR INDOOR POWER AND LIGHTING SHALL BE SINGLE CONDUCTOR TYPE THHN WITH SIZE AS INDICATED ON THE DRAWINGS. EXTERIOR POWER AND LIGHTING WIRING SHALL BE TYPE THWN WITH SIZE AS INDICATED ON THE DRAWINGS. MINIMUM WIRE SIZE SHALL BE #12 UNLESS OTHERWISE NOTED.
6. NEW ELECTRICAL COMPONENTS SHALL HAVE NEW NAMEPLATES INSTALLED AS INDICATED IN THE SPECIFICATIONS.
7. PROVIDE, AS USED HERE ON THE DRAWINGS, IS AN ALL-INCLUSIVE TERM TO FURNISH, INSTALL, WIRE, AND CONNECT SPECIFIED EQUIPMENT, COMPONENTS, ACCESSORIES, WIRING, CONDUIT, AND MOUNTING HARDWARE TO INSURE THAT SPECIFIED EQUIPMENT FUNCTIONS TO MEET THE SYSTEM REQUIREMENTS.

RACEWAY NOTES:

1. PROVIDE DISSIMILAR METAL SEPARATOR WHEN CONNECTING DIFFERENT TYPES OF METAL.
2. PULL BOXES SHALL BE FURNISHED AND INSTALLED WHERE NECESSARY IN THE CONDUIT SYSTEM TO FACILITATE CONDUCTOR INSTALLATION. MINIMUM QUANTITY LOCATED TO MEET ALLOWABLE CABLE PULL TENSION IS SHOWN ON DWG E-100. CONDUIT RUNS WITH MORE THAN FOUR 90 DEGREE BENDS SHALL HAVE A PULL BOX INSTALLED AT A CONVENIENT INTERMEDIATE LOCATION..
3. DIMENSIONS AND CONDUIT ROUTING SHALL BE FIELD VERIFIED PRIOR TO INSTALLATION OF EQUIPMENT.
4. PROVIDE AND INSTALL AT WALL OR FLOOR PENETRATIONS A PERMANENT FIRESTOP SYSTEM. THE SYSTEM SHALL CONSIST OF A WATER BASED FIRESTOP COMPOUND AS THE FILL, VOID, OR CAVITY MATERIAL ALONG WITH APPROPRIATE DAMMING MATERIAL (AS PER MANUFACTURER'S INSTRUCTIONS). THE FIRESTOP COMPOUND SHALL NOT CONTAIN ANY SOLVENTS, INORGANIC FIBERS, OR SILICONE COMPOUNDS AND SHALL NOT REQUIRE HEAT TO ACTIVATE THE SEAL. THE FIRESTOP COMPOUND SHALL BE ONE-PART MATERIALS, REQUIRING NO CRITICAL MIXING. THE PENETRATION SEAL MATERIAL MUST BE UNAFFECTED BY MOISTURE AND MUST MAINTAIN THE INTEGRITY OF THE FLOOR OR WALL ASSEMBLY FOR ITS RATED TIME PERIOD WHEN TESTED IN ACCORDANCE WITH ASTM E84. THE SYSTEM SHALL BE UL CLASSIFIED AND INSTALLED TO PROVIDE A 2 HOUR FIRE RATING. THE PENETRATION FIRE STOP MATERIAL SHALL BE FLAME-SAFE FS1900 SERIES COMPOUND AS MANUFACTURED BY GRACE CONSTRUCTION PRODUCTS OR EQUAL.
5. BUSHINGS SHALL BE INSTALLED AT CONDUIT ENTRANCES TO BOXES, CABINETS, AND EQUIPMENT ENCLOSURES.
6. PROVIDE LIQUIDTIGHT FLEXIBLE METALLIC CONDUIT CONNECTIONS TO EQUIPMENT AND DEVICES SUBJECT TO MOVEMENT OR VIBRATION SUCH AS MOTORS, TRANSFORMER, AND HVAC EQUIPMENT.
7. ALL EXTERIOR CONDUIT ANCHORS AND SECURING HARDWARE SHALL BE STAINLESS STEEL.

GROUNDING NOTES:

1. ELECTRICAL EQUIPMENT OR EQUIPMENT WITH ELECTRICAL CIRCUITS SHALL BE GROUNDED IN ACCORDANCE WITH NFPA 70 ARTICLE 250.
2. INSTALL AN INSULATED GREEN EQUIPMENT GROUND WIRE IN ALL CONDUITS, INSULATED GROUND CONDUCTORS SHALL BE 600V, THWN/THHN COPPER UNLESS OTHERWISE SPECIFIED. MINIMUM CONDUCTOR SIZE SHALL BE #12.
3. ALL NONCURRENT-CARRYING METALLIC PARTS SHALL BE GROUNDED. THE EQUIPMENT GROUNDING CONDUCTOR SHALL BE BONDED TO ALL ENCLOSURES AND BOXES IN WHICH IT TERMINATES OR PASSES THROUGH.
4. THE RESISTANCE TO EARTH OF THE GROUND GRID SHALL NOT EXCEED 10 OHMS.

BOX AND ENCLOSURE NOTES:

1. BOXES THAT ARE EXPOSED TO THE WEATHER OR THAT ARE IN NORMALLY WET LOCATIONS SHALL BE NEMA 4X FIBERGLASS UON.
2. JUNCTION BOXES SHALL BE LOCATED FOR ACCESSIBILITY.

PANELBOARDS NOTES:

1. NEW PANELBOARD SHALL BE SQUARE D. PROVIDE WITH A COPPER GROUND BUS AND NEUTRAL BUS.
2. PANELBOARD SCHEDULE TO CONFORM WITH THE CONSTRUCTION.

APPLICABLE CODES AND STANDARDS

1. NATIONAL ELECTRICAL CODE NFPA 70, 2011
2. FLORIDA BUILDING CODE FBC, 2007
3. BUILDING CONSTRUCTION AND SAFETY, NFPA 5000, 2009

ABBREVIATIONS AND ACRONYMS

(NOT ALL ARE APPLICABLE TO THIS PROJECT)

A AMPERES
AC ABOVE COUNTER
A/C AIR CONDITIONING
ACT ACOUSTIC CEILING TILE
AFF ABOVE FINISHED FLOOR
AHU AIR HANDLING UNIT
ATS AUTOMATIC TRANSFER SWITCH
AFG ABOVE FINISHED GRADE
AWG AMERICAN WIRE GAUGE
APPROX APPROXIMATELY

BLDG BUILDING
BC BELOW COUNTER

C CONDUIT
CU COPPER
COMM COMMUNICATIONS

DS DISCONNECT SWITCH
DWG DRAWING

ECB ENCLOSED CIRCUIT BREAKER
EF EXHAUST FAN
ELEC ELECTRICAL
EMS ENERGY MANAGEMENT SYSTEM
EMT ELECTRICAL METALLIC TUBING
EMH ELECTRICAL MANHOLE
EWC ELECTRIC WATER COOLER
E EXISTING TO REMAIN

FA FIRE ALARM
FACP FIRE ALARM CONTROL PANEL

G GROUND
GEC GROUND ELECTRODE CONDUCTOR
GF GROUND FAULT
GFI GROUND FAULT INTERRUPTER
GFCI GROUND FAULT CIRCUIT INTERRUPTER
GND GROUND
GRC GALVANIZED RIGID CONDUIT

HID HIGH INTENSITY DISCHARGE
HP HORSE POWER
HVAC HEATING, VENTILATING AND AIR CONDITIONING

JBOX JUNCTION BOX

KAIC (THOUSAND) AMPERE INTERRUPTING CAPACITY
KCMIL THOUSANDS OF CIRCULAR MILS
KVA KILOVOLT-AMPERES
KW KILOWATT

LB LOAD BANK
LC LIGHTING CONTACTOR
LED LIGHT EMITTING DIODE
LTG LIGHTING
LFNC LIQUIDTIGHT FLEX NONMETALLIC CONDUIT

MCB MAIN CIRCUIT BREAKER
MCU MASTER CONTROL UNIT
MDP MAIN DISTRIBUTION PANEL
MLO MAIN LUG ONLY
MH METAL HALIDE
MH MANHOLE
MTD MOUNTED
MTS MANUAL TRANSFER SWITCH
MV MEDIUM VOLTAGE

N NEUTRAL
NA NOT APPLICABLE
N.C. NORMALLY CLOSED
NEC NATIONAL ELECTRICAL CODE
NEMA NATIONAL ELECTRICAL MANUFACTURERS ASSOCIATION
NF NON-FUSED
NFPA NATIONAL FIRE PROTECTION ASSOCIATION
NIC NOT IN CONTRACT
NL NIGHT LIGHT
N.O. NORMALLY OPEN
N.T.S. NOT TO SCALE

P POLE
PB PULL BOX
PB PUSH BUTTON
PNL PANELBOARD
PVC POLYVINYL CHLORIDE
PVC40 PVC SCHEDULE 40
PWR POWER

RAD RADIATOR
RM ROOM
RSC RIGID STEEL CONDUIT
R EXISTING TO BE RELOCATED

SEC SECURITY
SF SUPPLY FAN
SN SOLID NEUTRAL
SPEC SPECIFICATION
SS STAINLESS STEEL
SQ SQUARE
SWBD SWITCHBOARD
SW SWITCH
SWGR SWITCHGEAR

T/S TIMESWITCH
TEL TELEPHONE
TTC TELEPHONE TERMINAL CABINET
TYP TYPICAL
TR TRANSFORMER
TSP TWISTED SHIELDED PAIR
TV TELEVISION

UC UNDER COUNTER
UL UNDERWRITERS LABORATORIES
UG UNDERGROUND
UH UNIT HEATER
UON UNLESS OTHERWISE NOTED

V VOLTS

W WIRE
WP WEATHERPROOF
W/W WIREWAY

XFMR TRANSFORMER

Y WYE (CONNECTED)

ZD ZONE DAMPER

3R NEMA TYPE 3R
4X NEMA TYPE 4X

ELECTRICAL SYMBOLS LEGEND

(NOT SYMBOLS ALL ARE APPLICABLE TO THIS PROJECT)

- EXISTING TO BE REMOVED.
- NEW INSTALLATION ABOVE GRADE.
- NEW INSTALLATION BELOW GRADE.
- EXISTING TO REMAIN.
- WIREMOLD AL3300 SERIES RACEWAY LENGTH AS REQUIRED
- FLEXIBLE CONDUIT CONNECTION.
- 10 / S — INDICATES HOME RUN CIRCUIT. NUMBER INDICATES CIRCUIT NUMBER. LETTER S INDICATES PANELBOARD DESIGNATION. 2#12, 1#12GND, IN 3/4"C UON.
- 30/N — DISCONNECT SWITCH NON-FUSED, NUMBER INDICATES SWITCH SIZE, 3-POLE UNLESS OTHERWISE NOTED.
- 30/N — COMBINATION DISCONNECT AND MAGNETIC MOTOR STARTER.
- PANELBOARD – 120/208 VOLT, SEE PANEL SCHEDULES FOR SPECIFIC INFORMATION.
- PANELBOARD – 480/277 VOLT, SEE PANEL SCHEDULES FOR SPECIFIC INFORMATION.
- 1 — PLAN NOTE NUMBER.
- J — JUNCTION BOX WITH BLANK COVER. SIZE BOX PER NEC REQUIREMENTS.
- W — WIREMOLD POKE THRU DEVICE MODEL "RC9AM2TC" OR EQUAL
- DUPLEX; QUADRUPLEX CONVENIENCE RECEPTACLE NEMA 5-20R, 20A, 125VAC MOUNTED 18" AFF UON.
- P — POWER POLE WITH DUPLEX RECEPTACLE AND #12AWG WIRES
- 86 A — THREE PHASE EQUIPMENT RLA
- 1 — SINGLE PHASE MOTOR HP
- GROUND ROD.
- CORD AND PLUG
- T — PAD MOUNT TRANSFORMER
- 1 — PHOTO LOCATION
- 3 — DATA-3 PORT; DOUBLE GANG DATA BOX; PHONE OUTLET. RUN 3/4" CONDUIT WITH PULL STRING TO CEILING CAVITY. EXTEND 6" ABOVE FINISHED CEILING.
- TV — TV OUTLET
- VFD — VARIABLE FREQUENCY DRIVE
- TELEPHONE DEMARC-4X6 PLYWOOD
- ST — SHUNT TRIP
- A1 — FIXTURE TYPE DESIGNATION
- EXIT SIGN, SHADED AREA SHOWS EXIT DIRECTION
- 1X4 FLUORESCENT LUMINAIRE
- WALL SCONCE
- RECESSED CAN LIGHT
- 2X4 FLUORESCENT LUMINAIRE
- 2x2 FLUORESCENT LUMINAIRE
- CEILING SCONCE
- STRIP LIGHT
- WALL REFLECTOR
- EMERGENCY LIGHT
- SS — SURGE SUPPRESSOR
- SP — SPEAKER
- OS — OCCUPANCY SENSOR WALL MOUNTED
- OS — OCCUPANCY SENSOR CEILING MOUNTED
- TC — LIGHTING TIMER CONTROL DEVICE
- \$; \$3; \$4; \$K — SWITCH: SINGLE, 3-WAY, 4-WAY, KEY SWITCH
- \$D — SWITCH: DIMMER
- SWITCH: PUSH BUTTON
- FACP — FIRE ALARM CONTROL PANEL
- F — HORN AND STROBE COMBINATION
- S — SMOKE DETECTOR
- F — FIRE ALARM PULL STATION
- STROBE
- H — HEAT DETECTOR
- DUCT SMOKE DETECTOR
- DH — DOOR HOLDER

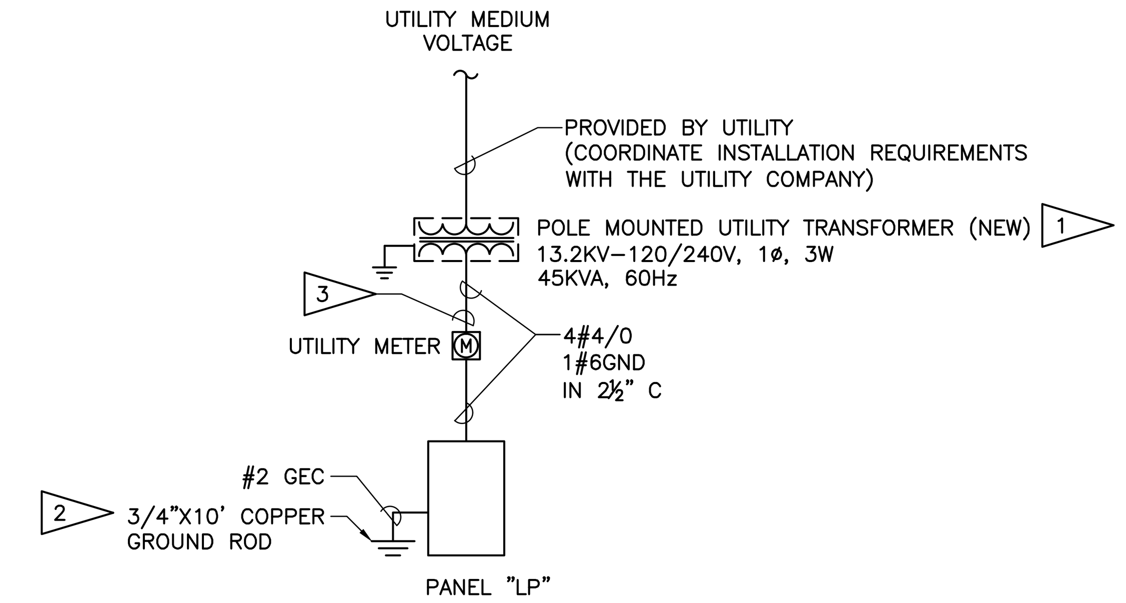

FLAG NOTES:

1. COORDINATE THE FINAL TRANSFORMER LOCATION WITH THE LOCAL UTILITY COMPANY.
2. GROUND AS PER NEC ARTICLE 250.
3. RUN CONDUCTORS UP UTILITY POLE. REFER TO SITE PLAN FOR POLE LOCATION. INSTALLATION SHALL BE IN ACCORDANCE WITH UTILITY COMPANY REQUIREMENTS.

ELECTRICAL SINGLE LINE DIAGRAM

N.T.S.

PANELBOARD "LP"

REMARKS:	MARK: PANEL "LP"	MAINS: 225	POLES: 42
SERVICE RATED	V,P,W: 120/120V,1ø,3W	O.C. DEVICE: BREAKER	MOUNTING: SURFACE
65KA INTEGRAL TVSS	BUS MATERIAL: COPPER	DEVICE FAMILY: BOLT-ON	ENCLOSURE: NEMA1
100% RATED	BUS RATING (AMP): 225	INT. RATING (KA SYM.) 22	LOCATION: EQUIPMENT BAY

CKT #	LOAD DESCRIPTION	COND SIZE	W.SIZE PH	W.SIZE GND	C.B P	C.B TRIP	PHASE LOADS (VA)	PHASE LOADS (VA)	C.B TRIP	C.B P	W.SIZE GND	W.SIZE PH	COND SIZE	LOAD DESCRIPTION	CKT #
1	BAY RECEP	3/4	12	12	1	20	720	800	20	1	12	12	3/4	BAY LIGHTS	2
3	BAY RECEP	3/4	12	12	1	12	720	900	20	1	12	12	3/4	INTERIOR LIGHTS	4
5	HALLWAY RECEP	3/4	12	12	1	12	540	496	20	1	12	12	3/4	PUBLIC RESTROOM LIGHTS	6
7	FIRST AID RECEP	3/4	12	12	1	20	720	1500	20	2	12	12	3/4	WH-1	8
9	STAFF RESTROOM RECEP	3/4	12	12	1	20	720	1500				12			10
11	OFFICE RECEP	3/4	12	12	1	20	720	2700	25	2	10	10	3/4	CU-1	12
13	LAW ENFORCEMENT RECEP	3/4	12	12	1	20	720	2700				10			14
15	PUBLIC RESTROOM RECEP	3/4	12	12	1	20	1080	–	20	1	–	–	–	SPARE	16
17	BAY DOOR OPENER	3/4	12	12	1	20	1176	426	20	2	12	12	3/4	AC-1	18
19	BAY DOOR OPENER	3/4	12	12	1	20	1176	426				12			20
21	SPARE	–	–	–	1	20	–	1300	20	1	12	12	3/4	EF-1,EF-2	22
23	REFRIGERATOR	3/4	12	12	1	20	1500	600	20	1	12	12	3/4	FACP	24
25	FLUSH VALVE SENSOR	3/4	12	12	1	20	200	360	20	1	12	12	3/4	SERVER RECEP	26
27	FLUSH VALVE SENSOR	3/4	12	12	1	20	200	360	20	1	12	12	3/4	SERVER RECEP	28
29	LIFE GUARD TOWER	1	6	10	2	60	3000	–	20	1	–	–	–	SPARE	30
31		–	6	–	–	–	3000	–	20	1	–	–	–	SPARE	32
33	–	–	–	–	–	–	–	–	–	–	–	–	–	–	34
35	–	–	–	–	–	–	–	–	–	–	–	–	–	–	36
37	–	–	–	–	–	–	–	–	–	–	–	–	–	–	38
39	–	–	–	–	–	–	–	–	–	–	–	–	–	–	40
41	–	–	–	–	–	–	–	–	–	–	–	–	–	–	42

DEMAND FACTOR: 1.00 — DESIGN FACTOR: 1.25 — CONNECTED LOAD (VA): 30260 (126A @ 120/240V, 1ø, 3W)

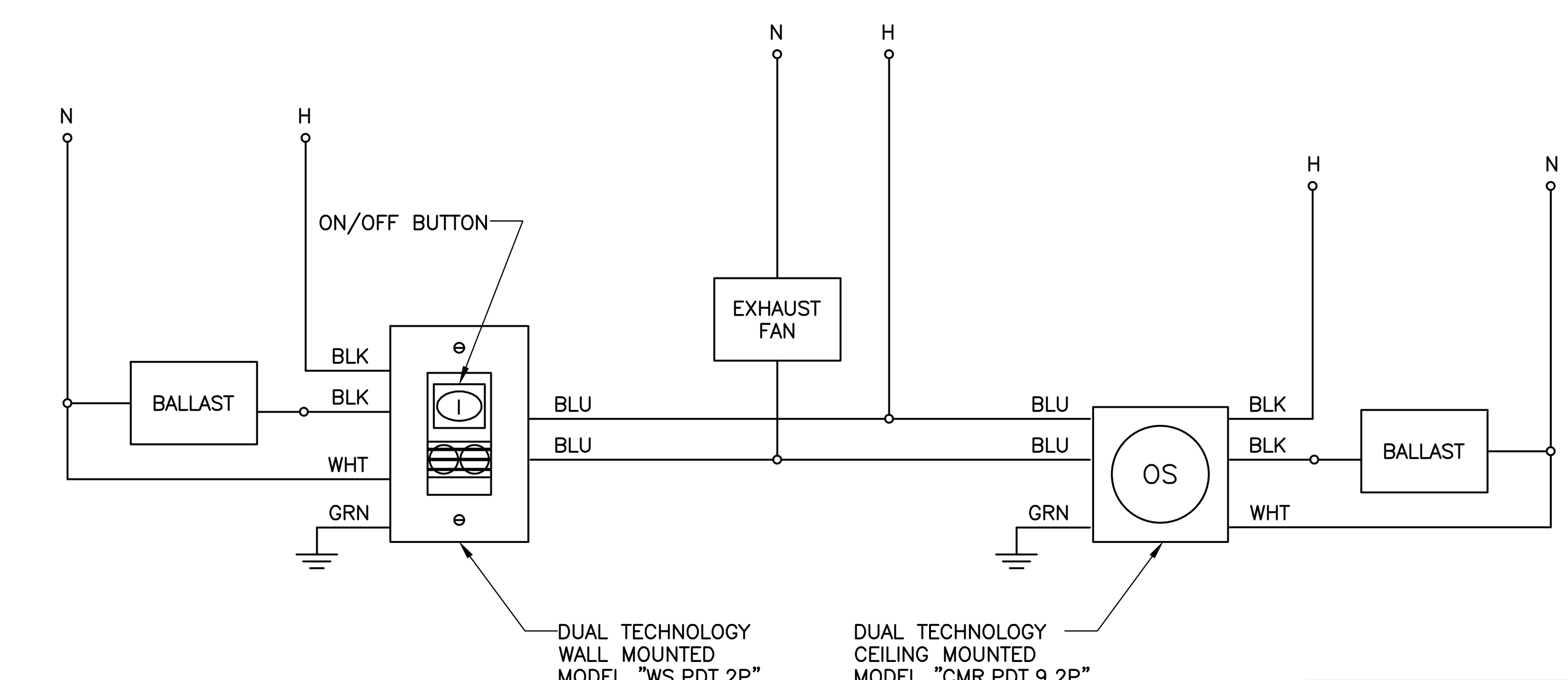

NOTES:

1. USE SENSORSWITCH OR APPROVED EQUAL IVORY COLOR.
2. INSTALL AS PER MANUFACTURER'S RECOMMENDATIONS.
3. LIGHTS SHALL REMAIN ON FOR 20 MIN AFTER LAST DETECTION.

OCCUPANCY SENSOR WIRING DETAILS

N.T.S.

STEVEN V. SVEDA
FL PE# 68982

DJ DESIGN, INC.
913 NORTH NOVA RD.
HOLLY HILL, FL 32117
AA 26000567
PHONE (386) 255-6987
FAX (386) 255-6989

CDE COMPANY
Cape Design Engineering Co.
191 Center St. - Suite 201
Cape Canaveral, FL 32920
Phone: (321) 799-2970
BUSINESS LICENSE # EB8072

DATE | REVISIONS | REV# X

COUNTY OF VOLUSIA
CARDINAL AVENUE LIFEGUARD STATION
NOTES, LEGEND AND ABBREVIATIONS

CARDINAL AVENUE
ORMOND BEACH, FLORIDA

PJT#: 10-J-051
DATE: 09-20-11
DRN BY: B. KHOURY
DGN BY: B. KHOURY
REV BY: S. SVEDA
SCALE:

SHEET
E0.1

LOCATION:P:\2010\10-J-051\CAD\CARDINAL AVENUE LIFEGUARD STATION\SHEETS\10051_E0.1.DWG , DATE:10/10/2011 4:27:20 PM, SCALE:1'-0" = 1'-0" PAPER:ARCH EXPAND D (24.00 X 36.00 INCHES), STYLE:CDE-FULL.CTB, PRINTER:DWG TO PDF.PC3