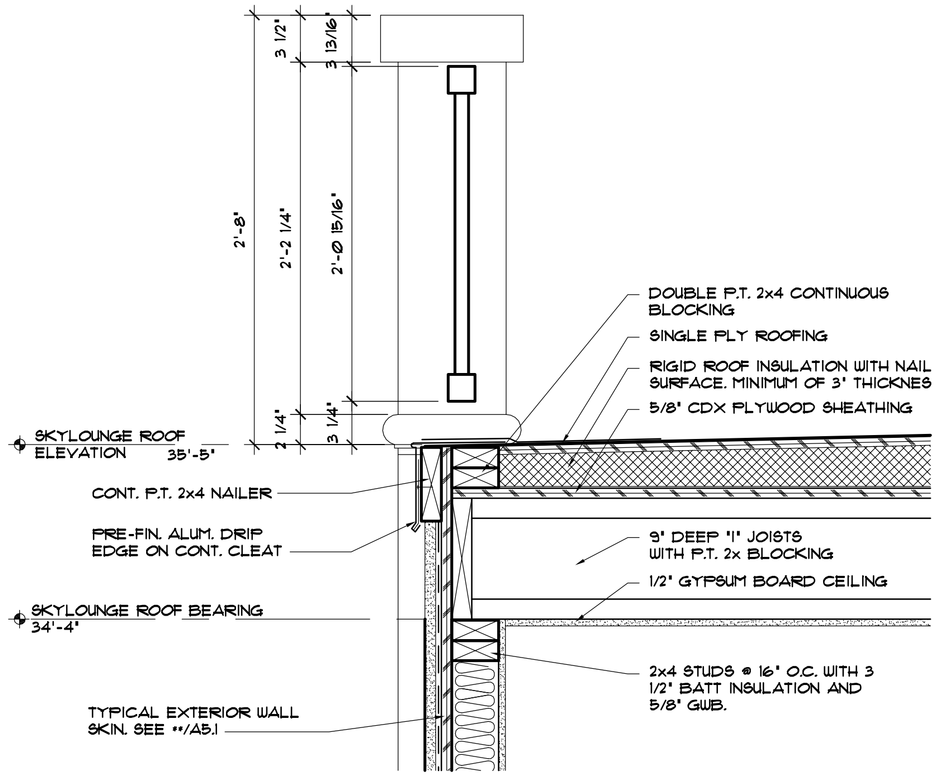

DETAIL 1/A5.4
SCALE: 1 1/2"=1'-0"

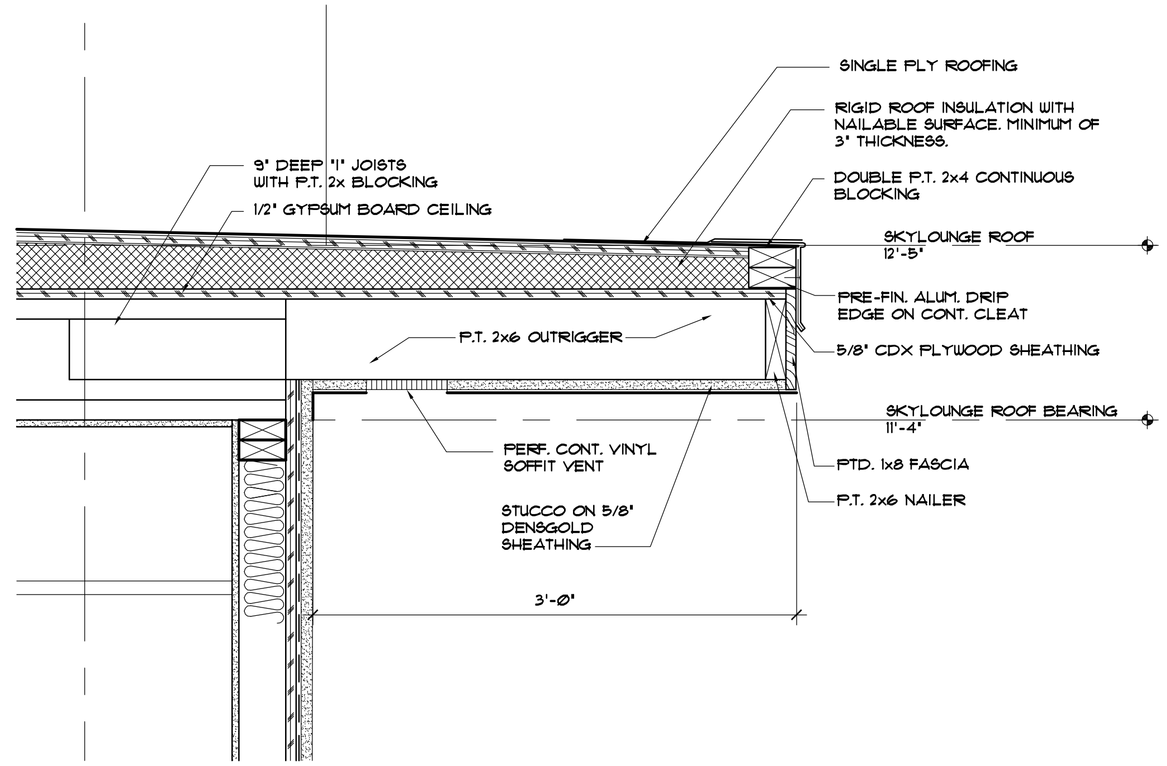

DETAIL 5/A5.4
SCALE: 1 1/2"=1'-0"

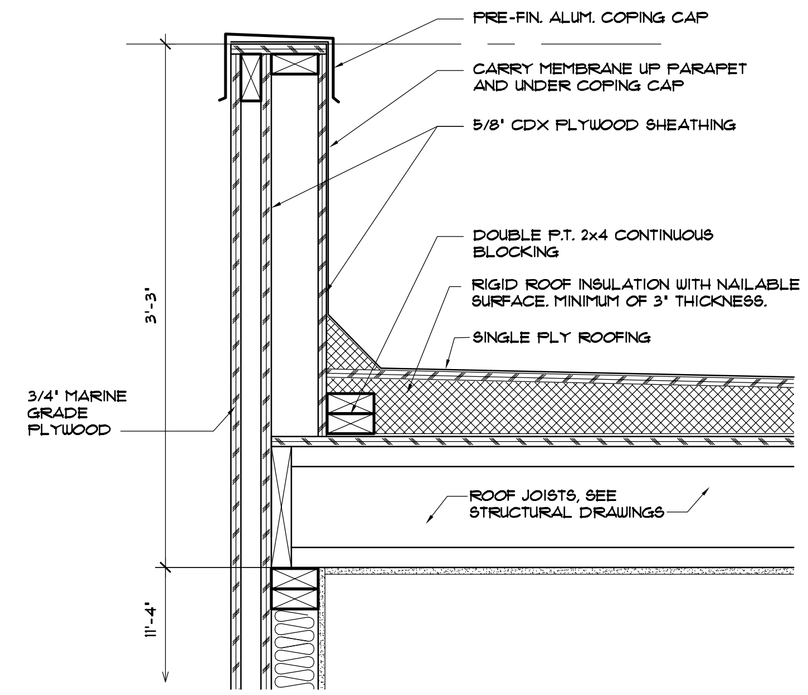

DETAIL 7/A5.4
SCALE: 1 1/2"=1'-0"

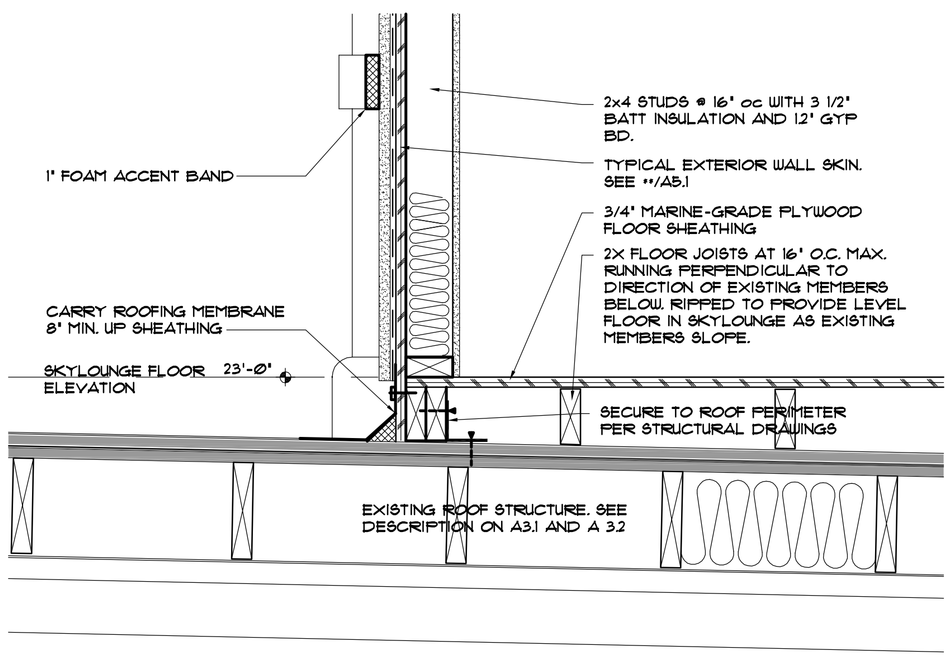

DETAIL 2/A5.4
SCALE: 1 1/2"=1'-0"

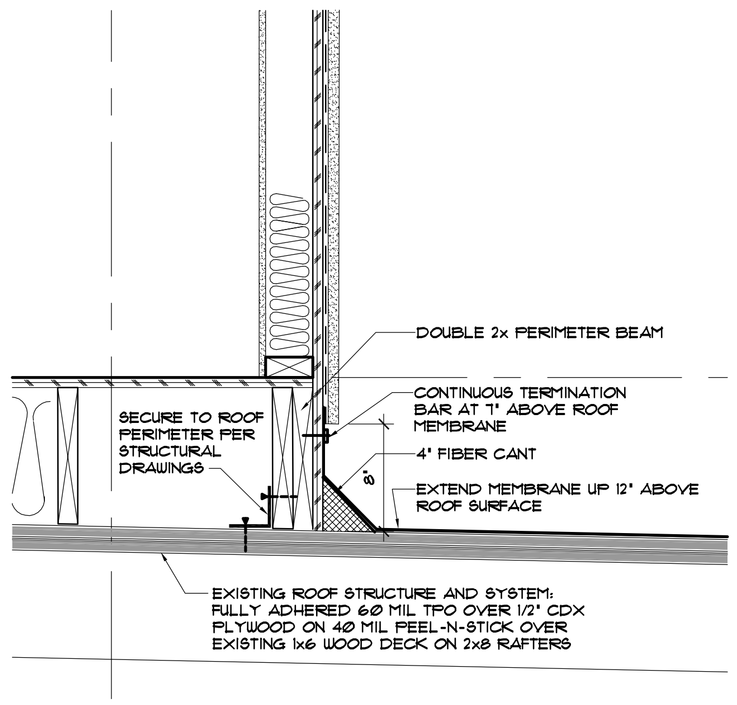

DETAIL 6/A5.4
SCALE: 1 1/2"=1'-0"

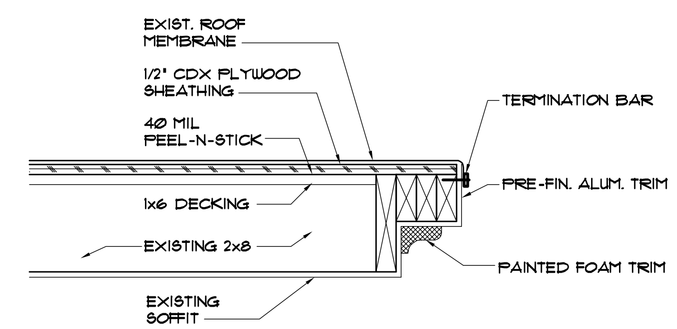

DETAIL 8/A5.4
SCALE: 1 1/2"=1'-0"

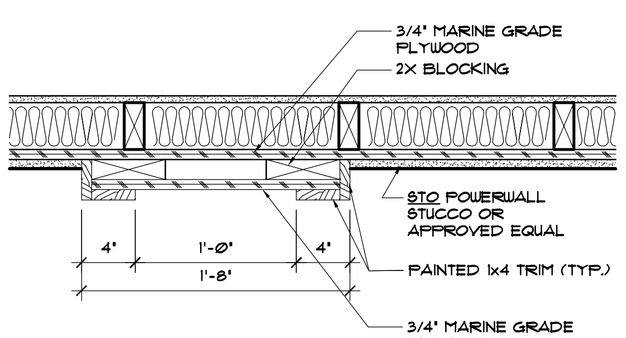

DETAIL 3/A5.4
SCALE: 1 1/2"=1'-0"

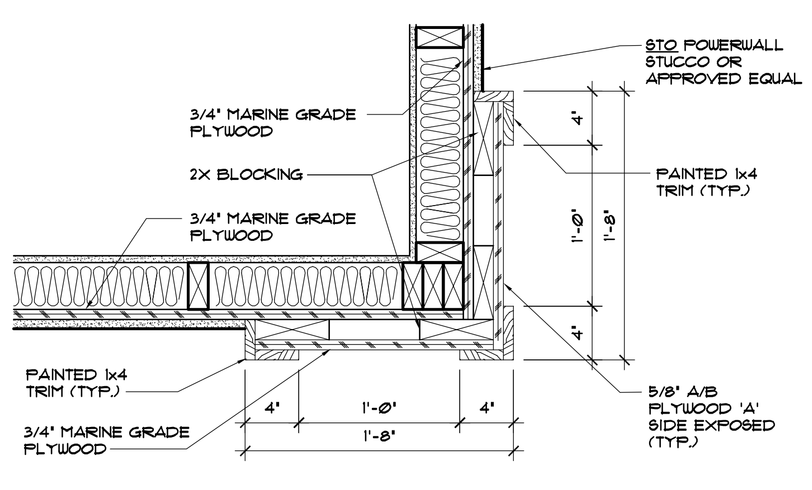

DETAIL 4/A5.4
SCALE: 1 1/2"=1'-0"

DESIGN, INC.
913 NORTH NOVA RD.
HOLLY HILL, FL 32117
AA 26000567
PHONE (386) 255-6987
FAX (386) 255-6989

REV#	REVISIONS	DATE
1		
2		
3		
4		
5		
6		
7		
8		

DAYTONA BEACH PIER BUILDING RENOVATION

MAIN STREET
DAYTONA BEACH, FL

PJT#: 02126.11
DATE: 06/30/10
DRN BY: HKC
DGN BY: DMS
REV BY: DMS
SCALE: AS NOTED

SHEET
A5.4
DETAILS